HIGH POWER TESTS OF A MULTIMODE X-BAND RF DISTRIBUTION SYSTEM*

S. Tantawi, and C. Nantista SLAC, Menlo Park, CA 94025, USA

Abstract

We present a multimode X-band rf pulse compression system suitable for the Next Linear Collider (NLC). The NLC main linacs operate at 11.424 GHz. A single NLC rf unit is required which produce 400 ns pulses with 600 MW of peak power. Each rf unit should power approximately 5 meters of accelerator structures. These rf units consist of two 75 MW klystrons and a dualmoded resonant delay line pulse compression system [1] that produce a flat output pulse. The pulse compression system components are all over moded and most components are design to operate with two modes at the same time. This approach allows increasing the power handling capabilities of the system while maintain a compact inexpensive system. We detail the design of this system and present experimental cold test results. The high power testing of the system is verified using four 50-MW solenoid focused klystrons. These Klystrons should be able to push the system beyond NLC requirements.

INTRODUCTION

Most proposed design for future linear colliders contains long runs of waveguides. In X-band room temperature designs these runs are in the order of 100 km or more. These waveguides are used for rf distribution and rf pulse compression. In particular, multi-bunch operation requires the rf pulse compression system to have flat output pulse for a relatively long duration. Producing, efficiently, such a flat pulse requires long waveguide delay sections. To reduce the losses and to enhance the power handling capabilities one must use overmoded waveguides. Manipulating rf signals in highly overmoded waveguide is not trivial. With even simple functions, such as bends, the designs are quit complicated in order to insure the propagation of a single mode without losses due to mode conversion to other modes.

To reduce the length of these waveguides we suggested multimoded systems [2]. In these systems the waveguide is utilized several times by carrying different modes at the same time. At first glance one might think that this would lead to extra complications in the design of most rf components. Indeed, one has to invent a whole new set of multimoded components. However, since simple manipulations such as bending an overmoded waveguide tends to couple the modes together; it turns out that multimoded components have simpler designs. This is also true from the mechanical design point of view; most of these components are compact.

Here, we will review the design of the dual-mode X-band rf system proposed for the Next Linear Collider (NLC). Recent experimental data are presented. A proof of principle experiment is being constructed at SLAC. The total output power is 600 MW for 400 nanoseconds.

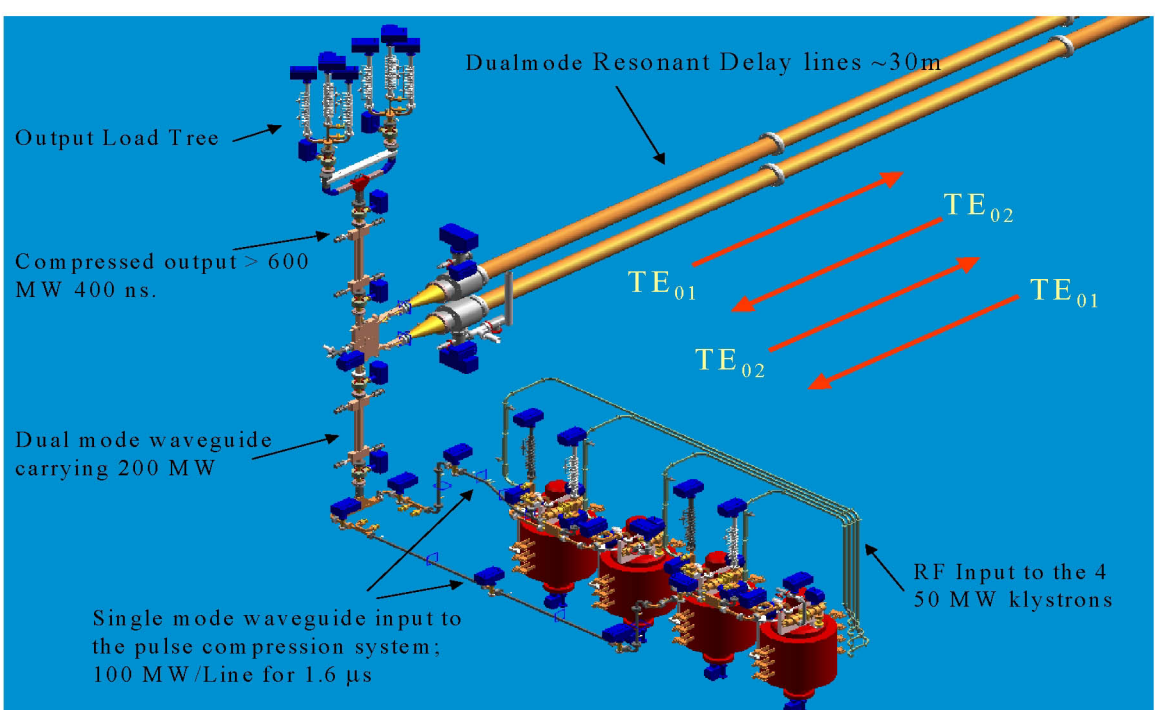

Figure 1. Layout of the of NLC proof of principle experiment.

SYSTEM DESCRIPTION

The system is shown in Fig. 1. Four 50 MW klystrons will power a fully dual-moded resonance delay line pulse compression system. Both the transfer lines and the delay lines are dual-moded.

The modes carried by the transfer lines are controlled by the rf phases of the different klystrons The modes in the delay lines are controlled by a set of mode converters at the input and the end of each delay line. By manipulating the modes in both the transfer lines one could achieve, no pulse compression or a pulse compression ratio of 4. The total output power is 200 MW for 1.6 microseconds, and 600 MW for 400 nanoseconds.

We have adopted a general philosophy in our designs. Most of the manipulation of rf systems are made with planer components. These are rectangular waveguides with all manipulations are made in the H-plane. Two modes are allowed to propagate: the TE_{01} and the TE_{02} modes. Because manipulations are only two-dimensional the height of the waveguide is a free parameter, which is used to reduce the field and losses in the system. In this system we increased the height of most of the rectangular components to reduce the electric field level to approximately 45 MV/m. The waveguide cross-section is close to a square. We were careful not to increase the height more than necessary to avoided complications that results from increased level of overmoding.

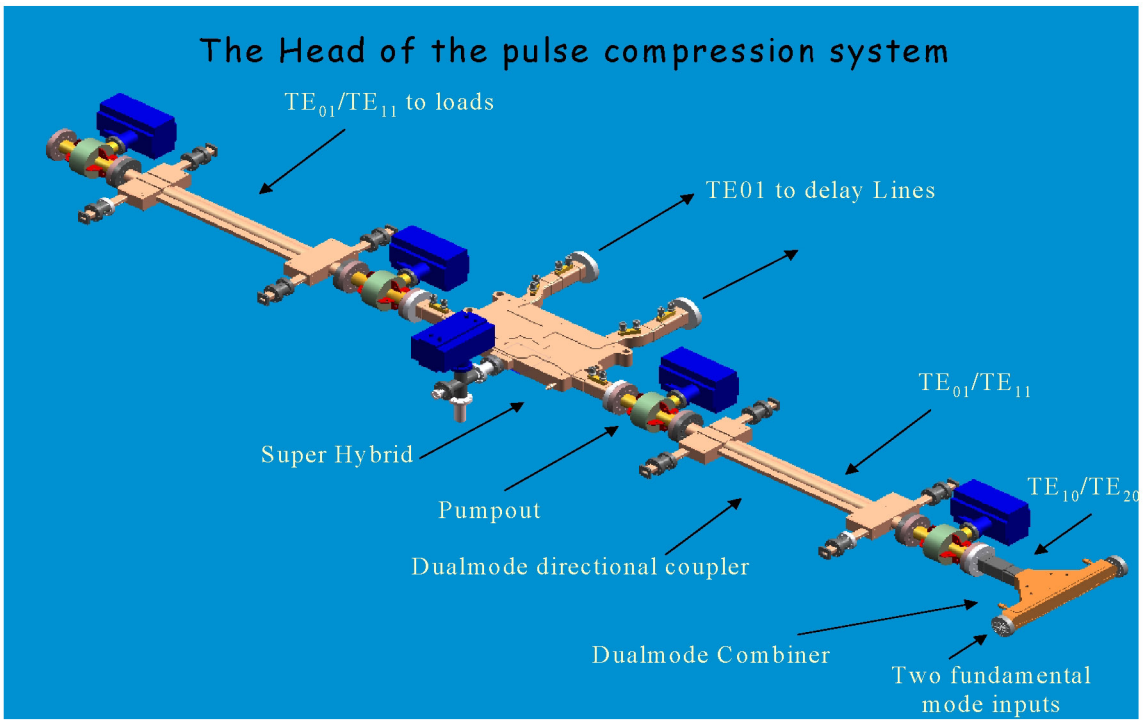

Figure 2. The dualmode transfer line.

To transport the rf signal we use circular waveguides. These carry the TE_{01} and the TE_{11} modes. We connect between circular and rectangular waveguides using a special types of tapers; mode preserving circular-to-rectangular tapers. These convert the TE_{10} rectangular mode into the TE_{11} circular mode and the TE_{20} rectangular mode into the TE_{01} circular mode. All vacuum functions, connection flanges and pumpout devices are implemented in circular waveguides. We also implemented the diagnostic devices, i.e.; mode selective directional coupler, in circular waveguides.

The highly overmoded delay lines carry both the TE_{01} and the TE_{02} modes. Because these two modes have no axial wall currents the design of the connection flanges is simplified.

TRANSFER LINE

The design of the transfer line and the pulse compression head is shown in Fig. 2. The four klystrons are divided into two banks each contain two klystrons. Each two klystrons are combined together to produce, essentially, a single rf source with an output power of 100 MW for a 1.6 μs. These two 100 MW rf source feeds the combiner (see Fig. 2). The combiner launches two modes in the system. The weight of each mode is dependent on the relative phase and amplitude between the two banks of klystrons. The system is designed such that if the launched mode is the TE_{20} rectangular (TE_{01} circular) then the power is directed to the delay line and the compressed pulse is launched at the output towards the load tree in the same mode. On the other hand if the launched mode is the

TE_{10} rectangular (TE_{11} circular) the power is directed to the loads at the same mode without pulse compression.

In the following we will present and describe each component in that line separately.

The Combiner

The combiner design together with an HFSS illustration to its functionality is shown in Fig. 3.

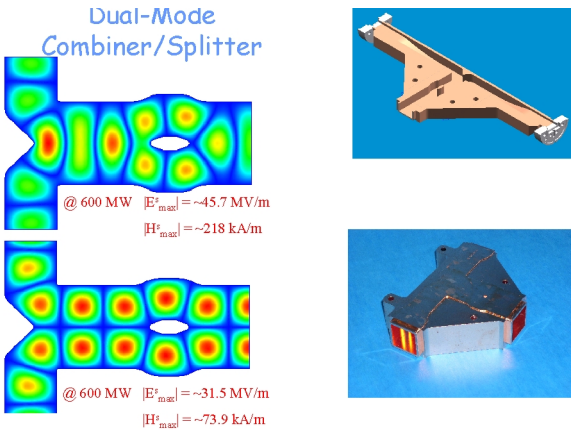

Figure 3. The dual moded combiner/splitter design.

Circular-to-Rectangular Taper

Figure 4. Shows the design of the circular-to-rectangular taper together with an HFSS simulation results.

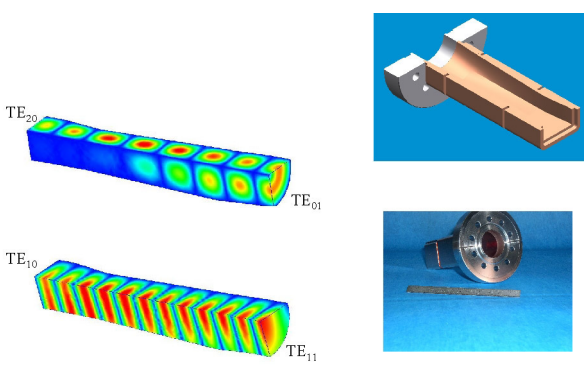

Figure 4. Dualmode Circular-to-Rectangular Taper.

To test the functionality of this taper together with the splitter we connected the two together as shown in Fig. 5. The TE_{01} mode is launched through the circular part of the taper using a wraparound mode converter. Then, the output of the taper launches the TE_{20} mode in the symmetry port of the combiner. The signal is split equally in the remaining two ports. We measured this signal through a specially designed set of instrumental height and width tapers, which reduces the waveguide cross-section to standard size and hence connectable to the network analyzer.

The results of these measurements are shown in Figs. 6a and 6b. From Fig. 6a one can estimate the total losses of the combiner, the circular to rectangular taper, the wraparound mode converter, and the instrumental tapers to be about 1.3%. Because of the asymmetry of the TE_{20} mode one should observe a π phase difference between the two ports. Within the measurment tolerances, this is verified in the experimental data shown in Fig. 6b.

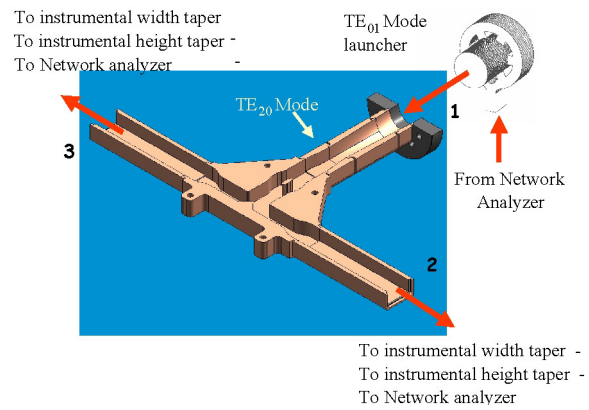

Figure 5. Cold Test Setup for the Combiner and Circular-to-Rectangular Taper.

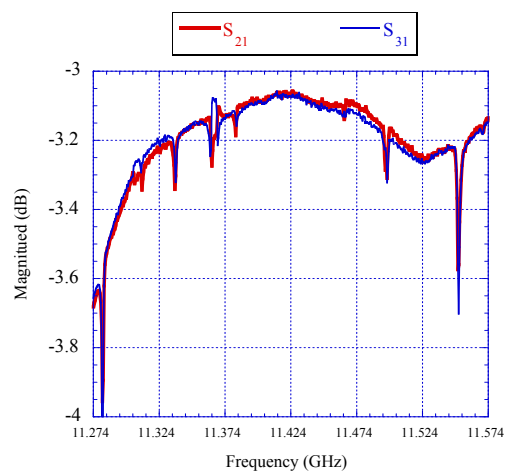

a)

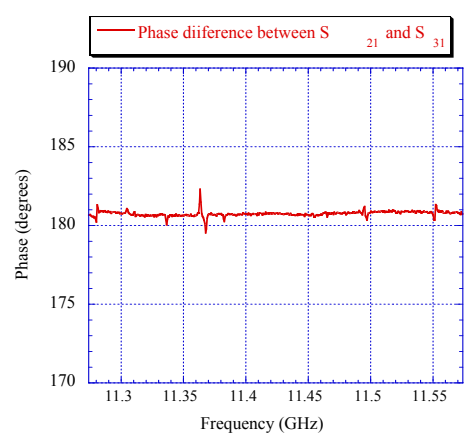

b)

Figure 6. Cold Test Results of: Splitter-Circular to rectangular taper-Wraparound mode converter-instrumental height taper-instrumental width taper. Total losses at 11.424 GHz =1.3%. a) Magnitude, b) Phase.

The Pumpout

Fig. 7 shows the structure of the circular pumpout. The number of holes around the azimuth is greater than the maximum azimuthal variation for any mode that can propagate in this waveguide. The distances between the rows of holes are adjusted to cancel any reflection for both propagating modes. Fig.8 shows the measured transmission for both modes.

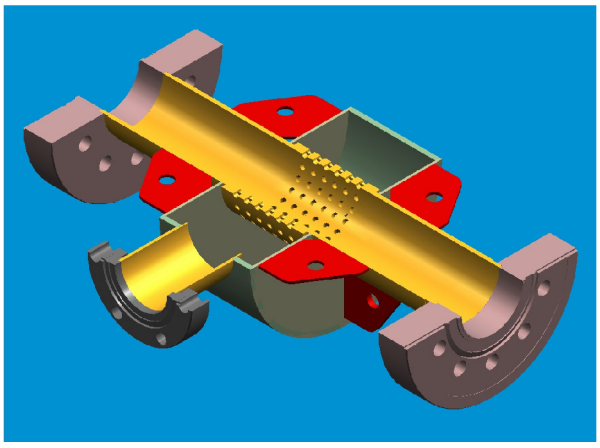

Figure 7. Pumpout design: the set of holes are designed to cancel any coupling or self-coupling for the TE_{01} and the TE_{11}

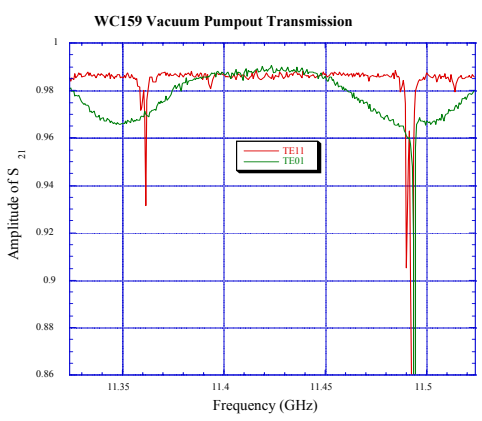

Figure 8. Cold Test Results of the dualmode pumpout

Dualmode Directional Coupler

The design is shown in Fig. 9. Two waveguides are coupled through a set of holes to the main circular waveguide. To couple the TE_{01} circular mode the width of the rectangular waveguide is adjusted to match the phase velocities. Because the circular waveguide is overmoded and the fundamental TE_{11} mode has a phase velocity close to the speed of light, one can not match this velocity in a single moded rectangular waveguide. To match the velocities we had to use a ridge waveguide.

To make the coupler directional and to discriminate coupling for unwanted modes the coupling hole pattern was chosen to represent a Hamming window. Finally, one has to bend the rectangular and ridge waveguide so that one can connect vacuum window and diagnostic devices. These bends also act as tapers to slandered size rectangular waveguides; WR90 in our case. The proper matching of these bends and the attached vacuum window is crucial for the marinating good directivity.

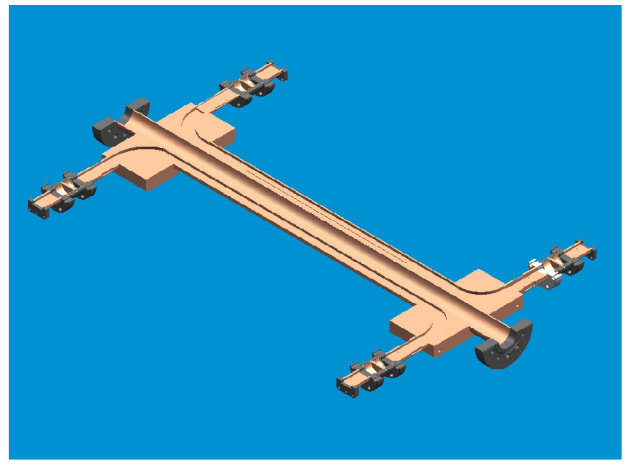

Figure 9. Dualmode directional coupler for system diagnostics.

In Fig. 10 we show the coupling to the TE11 arm due to an injected TE01 mode. Knowing that the coupling to the TE01 arm is –47 dB, one estimates a minimum isolation of –45 dB. The dynamic range of our equipment limited these measurements.

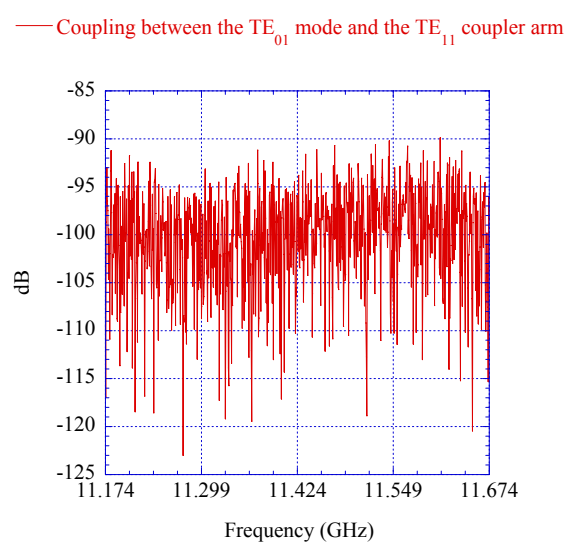

Figure 10. Coupling to the TE_{11} arm due to a TE_{01} mode. The dynamic range of the equipment limit.

The Sled Head

The heart of the pulse compression system is shown in Fig. 11. An illustration of its functionality is shown in Fig. 12. When the injected mode is the TE_{10} (TE_{11} circular) the signal passes through. When the injected mode id the TE_{20} (TE_{01} circular) the signal is sent to the delay line and the compressed pulse is sent to the output.

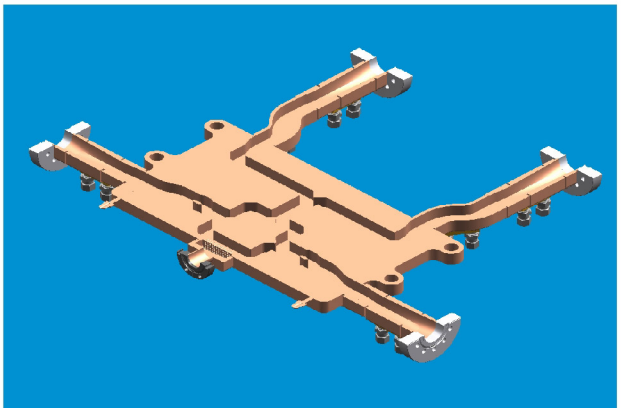

Figure 11. Sled Head Design: Basically three planer hybrids on one single substrate

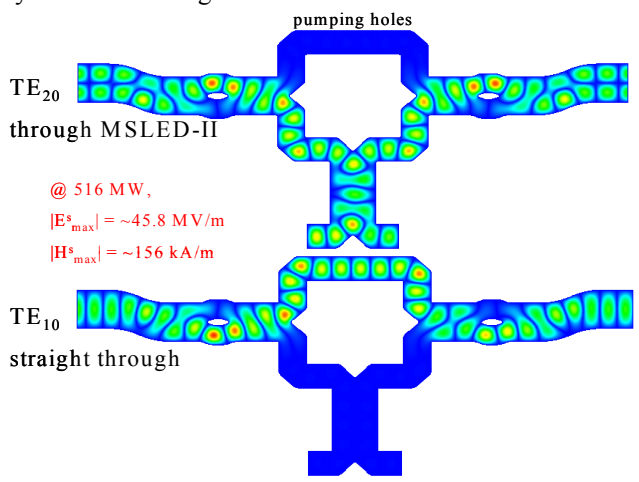

Figure 12 SLED Head Simulations

THE DUALMODE DELAY LINE

Consider the delay line shown in Fig. 1. The rf signal is injected into the delay line waveguide in the TE01 mode. This is the only azimuthally symmetric TE mode supported at the input port. The waveguide is then tapered up to a diameter that supports several TE0n modes. The TE01 mode travels all the way to the end of the delay line and then gets reflected and converted into the TE02 mode. The TE02 mode travels back to the beginning of this line and, since the input of the line cuts off this mode, gets reflected. If the input taper is designed carefully, TE02 can be reflected perfectly. Then, because of reciprocity, the TE02 wave gets converted back to TE01 at the end of the line. This mode then travels back and exits the line. The total delay in the delay line is twice that seen by a single moded line. Hence, one can cut the length of delay line by a factor of two.

The mode converter at the end of the delay line is shown in Figure 13. It is basically a step in the circular waveguide. If the big waveguide supports only the TE_{01} and the TE_{02} mode among all TE_{0n} modes and the small waveguide supports only the TE_{01} mode, then the device could be viewed as a three-port network. One can choose the diameter of the small guide such that the couplings between each mode in the large guide and the single mode in the small guide are equal. In this case, it is a symmetrical three-port network. A theory for such a device is presented in [3]. It shows that there exists a position for placing a short circuit in the middle arm of this three-port network (the small guide in this case) that makes it possible to transfer the power perfectly between the remaining two arms, or in this case between the TE_{01} and the TE_{02} modes in the large guide.

The only step left in the design of this end mode converter is a careful taper design that reduces the diameter of the delay line into the diameter of a waveguide that can support only TE_{01} and TE_{02} modes. The taper needs to transfer both modes perfectly. We made the compact taper by a computer-optimized series of steps as shown in Fig. 13. Similar design have been implemented for the input taper which Transfer the TE01 mode perfectely and reflects the TE02 mode without any mode convesion to any other TE0n modes.

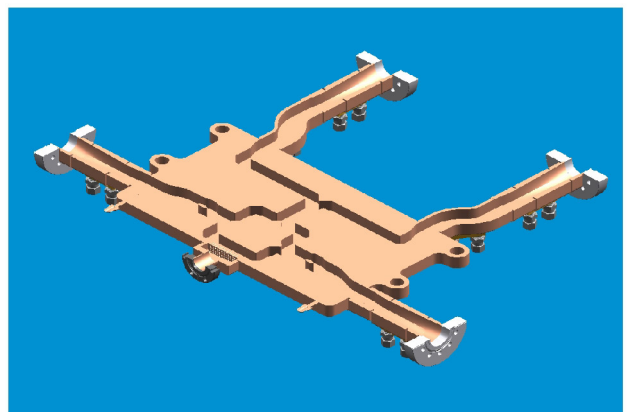

Figure 13. End Taper and Mode converter. The movable cup at the end of the taper reflects the TE01 mode into the TE02 mode.

ACKNOWLEDGEMENT

This work is a result of a continuous effort by many researches and engineers over many years. In particular, The efforts of N. Kroll, R. Miller, P. Wilson, V. Dolgashev, K. Fant, C. Pearson, and R. Ruth were instrumental to the results achieved to date. We wish also to thank Jose Chan for his persistence efforts during the manufacturing and testing of components

REFERENCES

[1] S.G. Tantawi, *et al.*, "The Generation of 400-MW RF Pulses at X Band Using Resonant Delay Lines," *IEEE Trans. Microwave Theory Tech.*, vol. 47, no. 12, pp. 2539-2546, Dec. 1999; SLAC-PUB-8074.

[2] S.G. Tantawi, et al., "A Multimoded RF Delay Line Distribution System for the Next Linear Collider," Phys.Rev.ST Accel.Beams, vol. 5, March 2002.

[3] Sami G. Tantawi, Ronald D. Ruth, Arnold E. Vlieks, and Max Zolotorev, "Active high-power RF pulse compression using optically switched resonant delay lines," IEEE Transactions on Microwave Theory and Techniques, MTT-45(8), August 1997, p. 1486–1492.